Diritti riservati All rights reserved

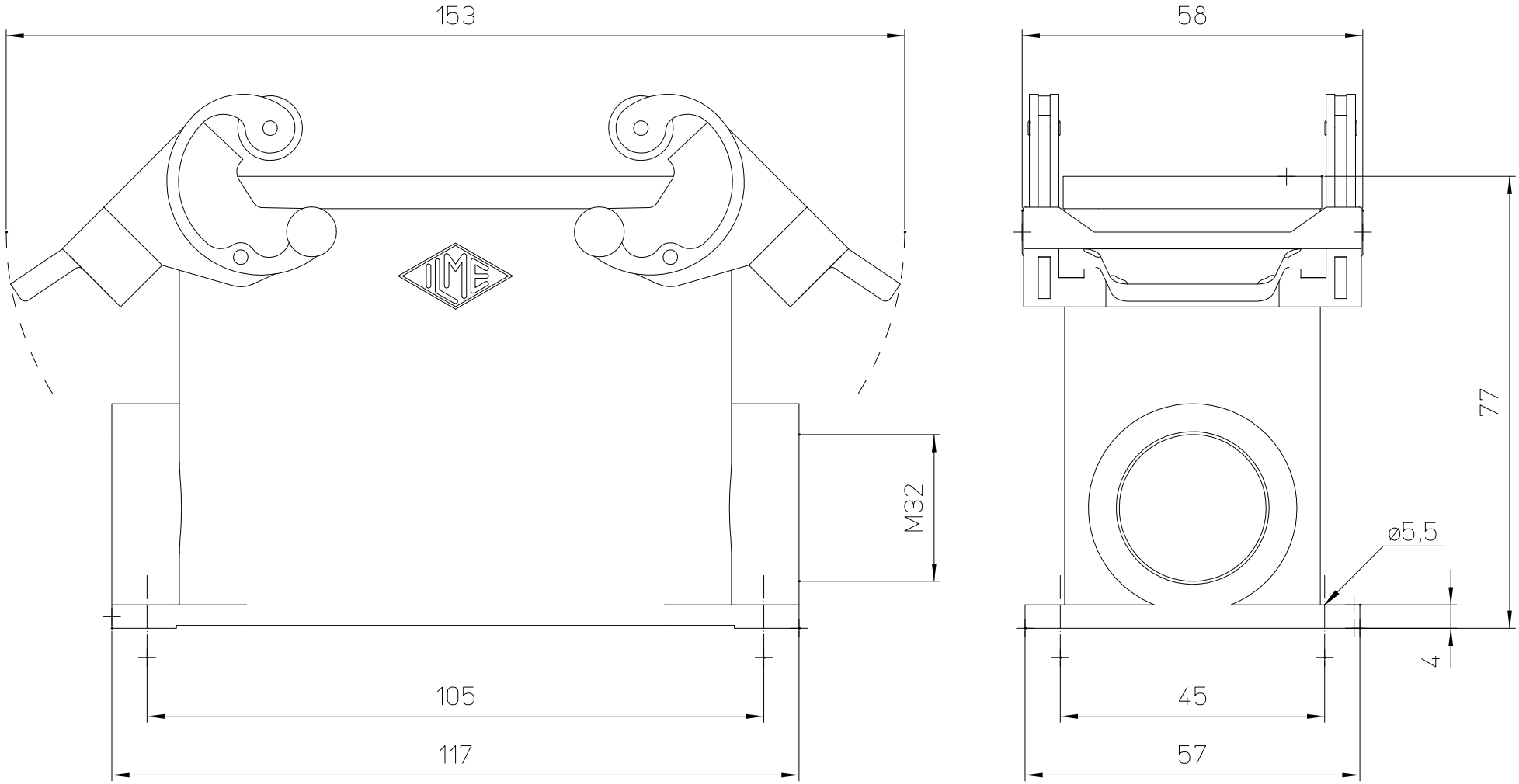

dimensions in mm	
Date	28/06/16
Sign.	D. Bonino

MAPR 16.32

Surface mounting housing 2 lev. M32 - 180° C

Scale 1:1